INTERNATIONAL JOURNAL IJEDR ECONOMICS DEVELOPMENT RESEARCH

International Journal of Economics Development Research, Volume 5(4), 2024 pp. 3600-3616

Integrative Model of Digital Marketing Elements on Purchase Intention: The Mediating Role of Electronic Word-Of-Mouth

Silvia Ekasari[1], Ngadino Surip[2], Hari Muharam[3]

Abstract:

The beauty industry in Indonesia is experiencing rapid growth, driven by increasing self-care awareness, social media influence, and product innovation. Facial serums are among the most popular products, with sales growth of 36.4% in August-September 2023. Skintific, a local brand offering facial serums, faces stiff competition from Wardah, which continues to lead the market as of June 2023. Additionally, consumer interest in synthetic products has declined, influenced by factors such as price perception, brand image, celebrity endorsers, and online promotions. In the digital era, electronic word of mouth (e-WOM) has become critical in shaping purchasing interest, as online product reviews, testimonials, and discussions significantly impact consumer perceptions. This study examines the role of e-WOM as a mediator in the relationship between digital marketing elements and consumer buying interest. A quantitative approach with descriptive verification was employed, using primary data collected from 397 female students at Depok Higher Education through a convenience sampling technique. Data analysis was conducted using the Structural Equation Model (SEM) with Lisrel software. The findings show that price perception, brand image, celebrity endorsers, and online promotions directly and positively influence both e-WOM and buying interest. Moreover, e-WOM significantly mediates the effect of these marketing factors on purchasing interest. The research introduces an integrative model for enhancing consumer buying interest in Skintific products, with a strong influence level of 90%.

Keywords*: Price Perception, Brand Image, Celebrity Endorser, Online Promotion, Electronic Word Of Mouth, Purchase Intention.*

Sumbitted: 8 September 2024, Accepted: 29 September 2024, Published: 15 October 2024

1. Introduction

The beauty and skincare industry in Indonesia is currently experiencing significant and dynamic growth. This industry has undergone rapid expansion, driven by various factors such as the increasing public awareness of the importance of self-care, the influence of social media, as well as ongoing product innovation and diversification. Based on data from various sources, the cosmetics market in Indonesia is projected to continue expanding, reaching a value of billions of dollars in the coming years. This trend is illustrated in Figure 1.

[1]*Management, Sekolah Tinggi Ilmu Ekonomi Manajemen Bisnis Indonesia, Depok, Indonesia.* silvia.ekasari@stiembi.ac.id
[2]*Management, Universitas Pakuan Bogor, Indonesia.* dinosurip@gmail.com,
[3]*Management, Universitas Pakuan Bogor, Indonesia.* hari.muharam@unpak.ac.id

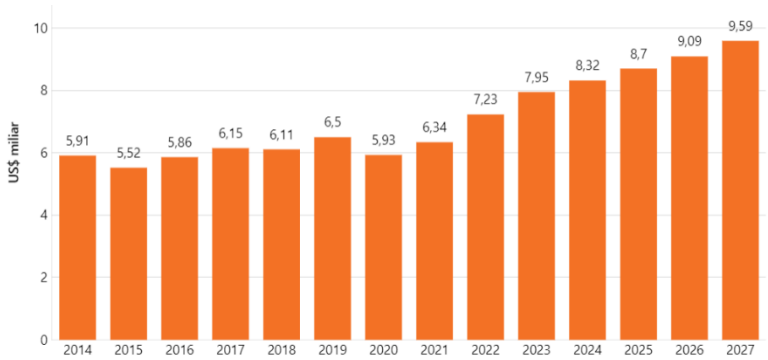

Figure 1. Personal Care and Beauty Products Revenue in Indonesia
Source: laporan *Statista* 2023

Public awareness of the importance of skincare has significantly increased, as evidenced by the growing number of people sharing information about skincare routines. Skincare has become a common necessity for both women and men, ranging from teenagers to the elderly. Competition between domestic and international products has intensified due to the large market. Additionally, technological advancements have made it easier for people to learn about products through social media. There has also been a significant shift in shopping behavior with the presence of social media. This is illustrated in Figure 2.

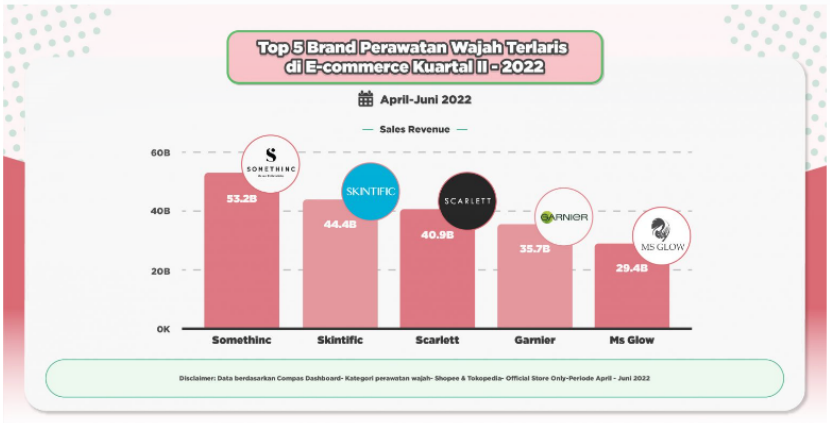

Figure 2. Top 5 Best-Selling Skincare Brands on E-commerce Platforms in Indonesia
Source: https://compas.co.id/article/top-5-brand-perawatan-wajah/

According to the figure above, Somethinc ranks first with total sales reaching Rp 53.25 billion. Skintific and Scarlett are in second and third places with total sales of Rp 44.48 billion and Rp 40.96 billion, respectively. Garnier and Ms Glow complete the top five with total sales of Rp 35.78 billion and Rp 29.48 billion. Overall, this data shows that the skincare industry in Indonesia continues to grow and become more competitive, providing opportunities for new brands to enter and compete while driving innovation and product quality improvement to meet the ever-increasing consumer demand. However, in April 2023, there was a decline in the sales of skincare products from the Skintific brand, as illustrated in Figure 3 below:

Figure 3. Sales of Local and Imported Skincare Products in April 2023
Source: Compas.co.id

Based on Figure 3, it is shown that during the period of April 1-15, Skintific ranked sixth, below Gulsha. Despite securing a market share of 9.33% and selling over 18,000 products, this marks a significant decline from Skintific's previous position. This indicates that consumer interest in Skintific products has decreased. In other words, to boost the sales of a product, it is essential to increase consumer purchase intention. As Hasan (2014) stated, "A company should pay attention to consumer psychology in terms of purchase intention, so the company can increase sales volume."

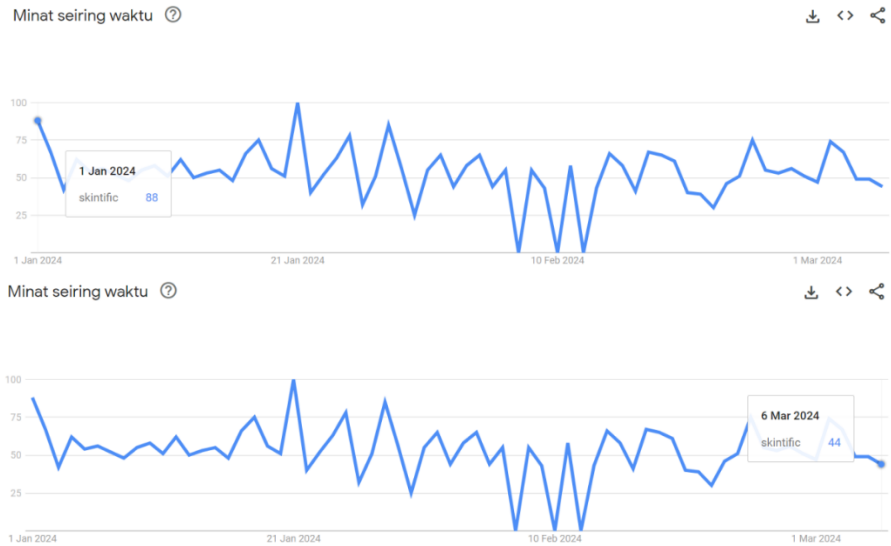

Figure 4. Interest in Skintific Over Time in 2024
Source: Data Tren Pencarian Google

Based on Figure 4, Google search trend data shows that consumer interest in the Skintific cosmetics brand experienced a significant decline from January to March 2024. At the beginning of January, interest peaked at 88%, but it dropped to 44% by March 6. This fluctuation in interest indicates the presence of complex market dynamics affecting consumer perception of the brand.

Facial serums have become one of the most popular and sought-after skincare products in recent years, including in Indonesia. A facial serum is a highly concentrated skincare product designed to specifically target skin concerns and deliver

more effective results compared to other skincare products. In Indonesia, the development of facial serums has seen significant growth in line with increasing public awareness of the importance of skincare and the desire to have healthy, glowing skin. This trend can be seen in Figure 5.

Figure 5. Facial Serum Sales for the Period of August-September 2023
Source: https://compas.co.id

From Figure 5, it is evident that facial serum sales grew by 36.4%. The increase in facial serum sales in Indonesia is clear evidence of the public's enthusiasm for effective and innovative skincare products. Facial serums have become an essential part of many people's skincare routines, and with their diverse benefits and ease of use, they have proven to provide effective solutions for various skin issues.

As demand for facial serums continues to rise, both local and imported brands are increasingly competing to attract consumer interest. This heightened competition highlights the importance of effective and innovative marketing strategies for brands to stand out in the market and secure a significant market share. This phenomenon is reflected in the intense competition within the market, as illustrated in Figure 6.

Figure 6. Top 5 Facial Serum Products on E-Commerce Platforms for June 2023
Source: compas.co.id/article/data-penjualan-serum-brand-lokal/

Based on Figure 6, Wardah holds the top position in terms of popularity in the facial serum market, while Skintific ranks second. Despite showing strong performance, Skintific has yet to surpass Wardah in the facial serum market competition. Wardah's dominance in product popularity indicates that Skintific still faces challenges in expanding its market share and competing more effectively. This analysis underscores the importance of evaluating Skintific's marketing strategies and product innovation to enhance its competitiveness, enabling the brand to attract more consumer interest in its facial serum products.

Poin penting bagi sebuah perusahaan untuk dapat memenangkan suatu persaingan pasar, yaitu perusahaan tersebut perlu memperhatikan apa yang melandasi seorang konsumen dalam memilih suatu produk, dalam hal ini adalah minat membeli dari seorang konsumen yang selalu timbul setelah adanya proses evaluasi alternative dan didalam proses evaluasi seeseorang akan membuat suatu rangkaian pilihan mengenai produk yang hendak dibeli atas dasar merek maupun minat (Sipakoly, 2023). Maka dari itu minat beli konsumen merupakan faktor penting dalam peningkatan pangsa pasar suatu produk.

According to Setiawan et al. (2022), consumer purchase intention ultimately leads to the decision-making process regarding which products to buy. This is closely related to consumer behavior, which encompasses actions directly involved in acquiring and determining products and services, including the decision-making processes that precede and follow these actions. The purchase intention within consumers is a significant phenomenon in marketing activities, as it underlies the decisions consumers make when considering a purchase.

Understanding consumer behavior is crucial for companies in developing effective marketing strategies. Consumer behavior includes the processes and activities involved when individuals or groups choose, purchase, use, or dispose of products, services, ideas, or experiences to satisfy their needs and desires (Kotler & Keller, 2016). One important aspect of consumer behavior is purchase intention, which is the tendency or desire of consumers to buy a particular product or service. Purchase intention is a critical stage in the consumer decision-making process. Before making a purchase, consumers typically go through stages such as recognizing needs, searching for information, evaluating alternatives, and finally forming purchase intentions. Consumer behavior is also linked to their attitudes and preferences regarding specific products or services. Positive attitudes and high preferences toward a product can enhance consumers' purchase intentions, while negative attitudes and low preferences can diminish those intentions (Blackwell, Miniard, & Engel, 2006).

Certainly, various factors contribute to the decline in consumer purchase intention, including price perception, brand image, celebrity endorsement, and online promotions. Setting the right price can help a company differentiate itself from competitors and attract consumer interest. Competitive pricing compared to similar products in the market can provide a significant competitive advantage. Promotional offers and discounts often enhance purchase intention in the short term, as consumers may feel motivated to buy more or act quickly if they believe they are getting a good

deal. By understanding the importance of price in influencing purchase intention, companies can develop appropriate pricing strategies to maximize their sales and profits while considering market dynamics, consumer behavior, and their business objectives. Previous research has shown that price has a positive and significant effect on purchase intention (Julia, 2023).

Brand image is also one of the most crucial aspects influencing consumer purchase intention. A strong brand image can build consumer trust and loyalty. Consumers often tend to choose products from brands they trust and feel familiar with, believing that products from reputable brands will meet their expected quality standards. Brand image can have a powerful emotional impact on consumers; brands with strong identities or compelling stories can evoke specific feelings in consumers, enhancing purchase intention. In a crowded market, a robust brand image can serve as a key differentiator between similar products. Consumers are more likely to choose well-known and reputable brands over less familiar ones. This has been corroborated by previous studies indicating that brand image has a significant effect on consumer purchase intention (Amelia, 2023).

Celebrity endorsement, or the use of celebrities as advocates for products or brands, has become a highly popular marketing strategy across various industries, including beauty and skincare. The inclusion of celebrities in advertisements and product promotions is expected to capture consumer attention, enhance brand image, and ultimately drive sales. Celebrity endorsement can influence consumers' attitudes and behaviors toward the advertised products or brands, thereby attracting their interest and impacting their purchasing decisions. Previous research has shown that celebrity endorsers have a positive and significant effect on purchase intention (Sari, Harliyani, & Sanjaya, 2022).

Online promotions play a crucial role in enhancing consumer purchase intention in today's digital era. This is supported by prior research indicating that promotions have a positive and significant impact on consumer purchase intention (Auliya, 2023). Promotions are one of the critical variables in the marketing mix that companies utilize to market their products and increase sales volume. Promotional activities not only serve as a communication tool between companies and consumers but also as a means to influence consumers in purchasing or using products according to their needs and desires. The relationship between promotional activities and promotional costs is very close and should be carefully considered. The implementation of promotional activities by companies includes advertising, personal selling, sales promotions, and publicity. These promotional activities are expected to maintain brand recognition by employing appropriate strategies (Ekasari, 2024).

Social Comparison Theory, formulated by Festinger (1954), is a concept in social psychology that explains individuals' natural drive to evaluate themselves. Because there often are no objective standards for self-evaluation, individuals tend to compare themselves with others to gain information about their abilities, opinions, and attitudes. The development of this theory began with considerations regarding social communication about changes in opinions within social groups. Generally, this theory

posits that social influence processes and certain competitive behaviors stem from the need for self-evaluation and the importance of that evaluation based on comparisons with others. Festinger (1954) proposed the theory of social comparison processes to explain comparative evaluations related to an individual's opinions and abilities. He stated that individuals are motivated to compare themselves with specific or general others to assess their own social situations. People tend to compare themselves with others who are similar to them, as this provides a more accurate evaluation of their opinions and abilities (Fakhri, 2017).

In the context of electronic word of mouth (e-WOM) and purchase intention, Social Comparison Theory elucidates why reviews and recommendations from others significantly influence consumer purchase intentions. When someone reads positive reviews about a product, they tend to compare themselves with the person providing that review. Consumers use reviews, comments, and shared experiences online as benchmarks to compare their own products, services, or experiences. This aligns with the fundamental principles of Festinger's theory, where individuals seek information from others to evaluate themselves and their situations.

Therefore, this research enriches the literature by adding e-WOM as a mediator in the research model. This allows for a deeper analysis of how e-WOM influences the relationship between independent variables (price perception, brand image, celebrity endorsement, and online promotions) and the dependent variable (purchase intention). By incorporating the e-WOM variable, this study provides a more comprehensive view of the factors influencing consumer purchase intentions in the digital age. It examines not only the direct effects of the independent variables but also their indirect effects through e-WOM.

2. Theoritical Background

Price perception is the subjective and emotional assessment of consumers regarding whether the price of a product or service is considered low or high. This perception is shaped by the information consumers receive and the meaning they assign to that information, as well as the comparative evaluation of the prices offered by sellers against those from other sources. Price perception also involves judgments about whether the price is reasonable, acceptable, and justifiable based on the value obtained from the product or service. The dimensions used to measure price perception include:

1. Perceived Quality: This dimension reflects that customers tend to prefer products that are more expensive when they believe that higher prices indicate better quality. Consumers' perceptions of a product's quality are influenced by their views on the brand name, store name, warranty provided (after-sales services), and the country of origin of the product.
2. Perceived Monetary Sacrifice: This dimension involves consumers comparing the price with the value they expect from a product or service. If the price perception is positive—meaning the price is considered affordable, appropriate for the quality, competitive, and fair—then consumers are more likely to be interested in purchasing the product.

Brand image refers to the perceptions and mental representations that consumers form about a particular brand. It encompasses evaluations of the extrinsic characteristics of products or services, as well as how the brand fulfills psychological or social needs. Brand image shapes consumer trust in the brand and is an integral part of brand equity, reflecting consumer responses to the overall offerings of the company. The dimensions used to measure brand image include:

1. Brand Awareness: This dimension involves the process of moving from unawareness of a brand to being confident that the brand is the best within its specific product or service category.
2. Brand Loyalty: This dimension indicates the existence of a bond between customers and a particular brand, often marked by repeat purchases.
3. Brand Association: This dimension encompasses all aspects related to consumers' memories of the brand. These associations not only exist but also have varying levels of strength. The connection to the brand will be stronger if it is based on experiences that communicate its value. This connection is further reinforced if supported by a network of other relationships.
4. Perceived Quality: This dimension emphasizes consumers' perceptions of the actual quality of the services provided by retailers to their customers.

Celebrity endorsers are individuals or groups of celebrities used by companies as communication channels to promote products or services. This process involves celebrities expressing their support for a brand with the aim of leveraging their popularity and personalities to create positive associations with the brand, thereby enhancing its appeal, credibility, and value within the company's marketing strategy. The dimensions used to measure celebrity endorsers include:

1. Expertise: This dimension describes the extent to which a communicator is perceived as a valid source of statements, referencing the knowledge, experience, or skills that the endorser possesses.
2. Trustworthiness: In the literature on celebrity endorsement, this dimension refers to the honesty, integrity, and reliability of the endorser.
3. Attractiveness: This dimension relates to the physical appeal and attractiveness of the endorser and is operationalized in terms of physical charm, sexiness, or allure.

Online promotion refers to marketing and communication activities conducted through online media, including social media, to introduce, offer, and market products or services without the need for face-to-face interactions. This is an essential part of digital marketing strategies aimed at reaching and engaging a broader audience while advancing the company's business objectives. The dimensions used to measure online promotion include:

1. Identifying Target Market: This dimension encompasses profiling customer segments or potential customers, followed by determining the most appropriate messages and media to inform, persuade, and remind customers and prospects to respond positively to the organization's brand.
2. Using Appropriate Media: This dimension involves employing all forms of marketing communication and suitable media as potential channels for message

delivery. Relevant media includes any messaging platform capable of reaching the target customers and showcasing the brand.
3. Providing Needed Information: This dimension focuses on summarizing what brand exists in the minds of the target market compared to its competitors and consistently conveying the same idea across all available media channels.
4. Building Relationships with Consumers: This dimension emphasizes that successful marketing communication requires a good relationship between the brand and the customers. A successful relationship with customers will lead to repeat purchases and loyalty toward the brand.
5. Influencing the Target Market's Behavior: This dimension encourages various forms of behavioral responses, necessitating the movement of consumers to take action. Within integrated marketing communication (IMC) programs, it ultimately evaluates what influences behavior before purchasing a new brand.

Electronic word of mouth (e-WOM) is a form of marketing that utilizes the internet as a medium to create and disseminate word-of-mouth information regarding products or services. This information is shared by potential consumers, actual consumers, or former consumers who share their experiences with those products or services. e-WOM involves communication between consumers who may or may not know each other previously. This process creates a viral effect that can support marketing efforts and objectives by spreading information widely and rapidly through online platforms. The dimensions used to measure e-WOM include:
1. Rewards: This dimension encompasses social rewards (such as increased status or reputation in online communities), material rewards (such as loyalty points, discounts, or gifts), and psychological rewards (such as personal satisfaction from helping others or sharing positive or negative experiences).
2. Costs: This dimension includes the time and effort required to write reviews or provide recommendations, as well as potential risks they may face, such as criticism from others or negative impacts on their reputation if their reviews are considered unhelpful or misleading.
3. Benefits: This dimension pertains to the enhanced reception of information, more accurate recommendations of products or services, or a more satisfying shopping experience based on feedback from other users' reviews.

Purchase intention is a psychological condition in which consumers exhibit a desire and tendency to buy a particular product or service. It is a critical part of the consumer decision-making process that occurs after they receive stimuli from a product and before they actually make a purchase. Purchase intention reflects the consumer's intent and likelihood to make a future purchase, which is vital for marketers to understand and measure when designing effective marketing strategies. The dimensions used to measure purchase intention include:
1. Attitude Toward the Behavior: This dimension encompasses individuals' beliefs about the outcomes of the behavior and their evaluations of those outcomes.
2. Subjective Norm: This dimension involves individuals' perceptions of social pressure from significant others around them that influence their decisions to buy or not buy a product.

3. Perceived Behavioral Control: This dimension reflects individuals' perceptions of the ease or difficulty of performing the purchasing behavior, indicating their beliefs about their ability to overcome obstacles or take advantage of opportunities.

3. Methodology

The method employed in this research is a descriptive verification method with a quantitative approach. The data used are primary data, which were collected through the distribution of questionnaires to respondents using the convenience sampling technique. The sample for this study consists of 397 female students from higher education institutions in Depok. Data analysis techniques utilize Structural Equation Modeling (SEM) with the assistance of the Lisrel application program.

4. Empirical Findings/Result

Model Fit Test Results (GoF)

No	Type Gof	Parameter	Nilai Standar	Nilai Model	Kesimpulan
1	Absolut Gof	Chi-Square	semakin kecil semakin baik	265.85	Good Fit
2	Absolut Gof	df (Degrees of Freedom)	df>0	162	Good Fit
3	Absolut Gof	Chi-Square/df	≤2,0	1.64	Good Fit
4	Absolut Gof	Root Mean Square Error of Approximation (RMSEA)	<0,08	0.0197	Good Fit
5	Absolut Gof	90 Percent Confidence Interval for RMSEA	Lebih sempit lebih baik	0,019 ; 0,020	Good Fit
6	Absolut Gof	P-Value for Test of Close Fit (RMSEA < 0.05)	>0,05	0.06	Good Fit
7	Absolut Gof	Root Mean Square Residual (RMR)	<0,05	0.045	Good Fit
8	Absolut Gof	Standardized RMR	<0,05	0.048	Good Fit
9	Absolut Gof	Goodness of Fit Index (GFI)	≥90	0.99	Good Fit
10	Absolut Gof	Adjusted Goodness of Fit Index (AGFI)	≥90	0.97	Good Fit
11	Incremental Gof	Normed Fit Index (NFI)	≥90	0.98	Good Fit
12	Incremental Gof	Non-Normed Fit Index (NNFI)	≥90	0.97	Good Fit
13	Incremental Gof	Comparative Fit Index (CFI)	≥90	0.99	Good Fit
14	Incremental Gof	Incremental Fit Index (IFI)	≥90	0.99	Good Fit
15	Incremental Gof	Relative Fit Index (RFI)	≥90	0.96	Good Fit
16	Parsimosi Gof	Parsimony Normed Fit Index (PNFI)	≥90	0.95	Good Fit
17	Parsimosi Gof	Independence AIC	Nilai AIC Model 2746,85 lebih dekat dengan nilai saturated AIC 420,00		Good Fit
18	Parsimosi Gof	Model AIC			Good Fit
19	Parsimosi Gof	Saturated AIC			Good Fit
20	Parsimosi Gof	Independence CAIC	Nilai CAIC Model 2986.08 lebih dekat dengan nilai saturated CAIC 1446,63		Good Fit
21	Parsimosi Gof	Model CAIC			Good Fit
22	Parsimosi Gof	Saturated CAIC			Good Fit
23	Parsimosi Gof	Critical N (CN)	>200	426.73	Good Fit

Source: Primary Data Processing Results (2024)

Based on the results of the model fit testing, or goodness of fit (GoF), all ten parameters tested under the Absolute GoF category were found to fall into the good fit category. Similarly, all five parameters examined under the Incremental GoF category were also categorized as good fit. Additionally, all eight parameters assessed under the Parsimony GoF category were found to be good fit as well. Thus, all 23 testing parameters across the three types of GoF indicate that the model being studied has a very high level of fit with the actual model.

The results of the hypothesis testing, using the T-Value parameter, yielded the following structural model in Lisrel:

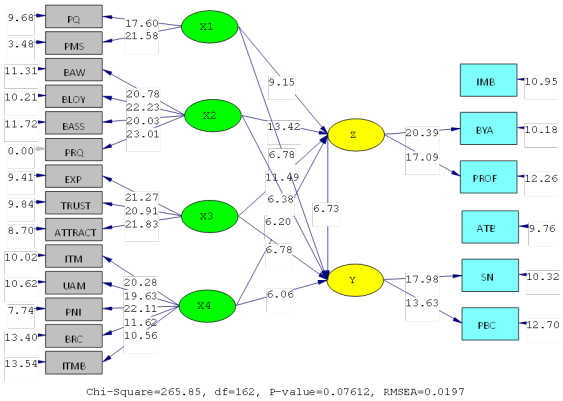

Figure 7. T-Value Parameter Results of the Structural Model

Next, statistical hypothesis testing was conducted based on the hypotheses proposed in the research. According to Figure 7 above, which illustrates the relationships among the research variables, the estimation results and significance testing of the path model between latent variables were obtained. If the structural path has a t-value greater than 1.96, then the path coefficient (parameter) is considered significant; conversely, if the t-value is less than 1.96, the path coefficient is deemed not significant. The values of the proposed model path coefficients are as follows:

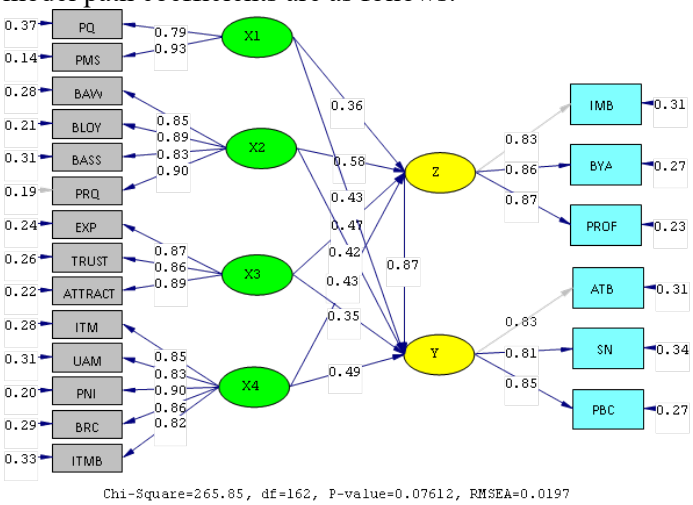

Figure 8. Results of the Structural Model Path Coefficients

Table 1. Summary of Hypothesis Testing Results for the Research Model

Hypothesis	Path Coefficient	SE	T Count	T Table	Conclusion
X1 --> Z	0.36	0.04	9.15	1.96	Significant
X2 --> Z	0.58	0.04	13.42	1.96	Significant
X3 --> Z	0.47	0.04	11.49	1.96	Significant
X4 --> Z	0.43	0.07	6.20	1.96	Significant
X1 --> Y	0.43	0.06	6.78	1.96	Significant
X2 --> Y	0.42	0.07	6.38	1.96	Significant
X3 --> Y	0.35	0.05	6.78	1.96	Significant
X4 --> Y	0.49	0.08	6.06	1.96	Significant

Z --> Y	0.87	0.13	6.73	1.96	Significant
X1 --> Z --> Y	0.31	0.06	5.37	1.96	Significant
X2 --> Z --> Y	0.50	0.10	6.07	1.96	Significant
X3 --> Z --> Y	0.41	0.08	5.81	1.96	Significant
X4 --> Z --> Y	0.37	0.09	4.52	1.96	Significant

Based on the table above, it can be concluded that out of the 13 proposed hypotheses, those with t-values greater than the critical t-value (t-table) led to the rejection of the null hypothesis (H0) and the acceptance of the alternative hypothesis (H1). This indicates a significant effect of the exogenous variables on the endogenous variables, and the mediating variables significantly mediate the effect on the endogenous variables.

Overall, the research findings demonstrate that price perception, brand image, celebrity endorsement, and online promotion have positive and significant effects on electronic word of mouth (e-WOM). Directly, price perception, brand image, celebrity endorsement, and online promotion also positively and significantly influence purchase intention. Furthermore, e-WOM has a positive and significant indirect effect in mediating the impact of price perception, brand image, celebrity endorsement, and online promotion on purchase intention.

The simultaneous effect of price perception, brand image, celebrity endorsement, and online promotion on e-WOM can be observed from the R^2 value of 0.69. This value converts to a coefficient of determination (KD) of R^2 x 100%, resulting in 0.69 x 100% = 69%. This means that e-WOM is influenced by 69% from its predictor variables, which include price perception, brand image, celebrity endorsement, and online promotion. The remaining 31% is influenced by other variables not examined in this research model.

Similarly, the overall influence of e-WOM, price perception, brand image, celebrity endorsement, and online promotion on purchase intention can be seen in the R^2 value of 0.90, which converts to a coefficient of determination (KD) of R^2 x 100%, resulting in 0.90 x 100% = 90%. This indicates that purchase intention is influenced by 90% from its predictor variables, including e-WOM, price perception, brand image, celebrity endorsement, and online promotion. The remaining 10% is influenced by other variables outside the scope of this research model.

The equations in the research model consist of two equations. The first structural equation is for electronic word of mouth (e-WOM), which is constructed based on the variables of price perception, brand image, celebrity endorsement, and online promotion. The second equation represents purchase intention, which is influenced by the variables of e-WOM, price perception, brand image, celebrity endorsement, and online promotion. The equations are as follows:

$$\mathbf{Z = 0.36*X1+0.58*X2+0.47*X3+0.43*X4, Errorvar.= 0.31, R^2 = 0.69 \ldots\ldots\ldots\ldots (i)}$$

$$\mathbf{Y=0.87*Z+0.43*X1+0.42*X2+0.35*X3+0.49*X4, Errorvar.=0.10, R^2= 0.90 \ldots (ii)}$$

From the first structural equation, it can be concluded that all latent variables contributing to electronic word of mouth (e-WOM) have positive influences. The most

dominant variable is brand image, with a coefficient value of 0.58, while the weakest variable is price perception, with a coefficient of 0.36.

Based on the results of the second structural equation, it is concluded that all latent variables contributing to purchase intention also have positive influences. The most dominant variable in this equation is e-WOM, with a coefficient value of 0.87, while the weakest variable is celebrity endorsement, with a coefficient of 0.35.

5. Discussion

The study reveals a positive and significant effect of price perception on e-WOM, but this influence does not directly translate into a significant effect on purchase intention. This suggests that while consumers may share their opinions online about the product's price being fair or aligned with quality, this alone is insufficient to drive purchase decisions. Similar findings by Chaerunnisa et al. (2023) show that even when price perception contributes to brand discussions, other factors such as promotions or brand image become more critical in encouraging purchase behavior. Therefore, companies should integrate pricing strategies with promotional efforts to increase conversion.

Brand image exerts a significant impact both on e-WOM and purchase intention. This aligns with the idea that a strong brand image fosters consumer trust and enhances self-perception, motivating customers to share positive experiences and influence others (Arianty & Andira, 2021). Additionally, brand loyalty, as the most dominant dimension of brand image in this study, suggests that long-term attachment to a brand significantly shapes both consumers' online interactions and their intent to buy (Amanda et al., 2023). These results highlight the need for consistent brand positioning to build emotional connections with customers.

The positive influence of celebrity endorsers on both e-WOM and purchase intention reinforces the importance of using endorsers who possess physical appeal and influence. This is consistent with prior studies indicating that attractiveness and credibility are key elements that can positively shape consumer attitudes toward both brands and products (Artha et al., 2021). As noted by Assalam and Wibisono (2020), endorsements are particularly effective when they resonate with the audience's aspirations, which enhances the likelihood of sharing such endorsements on social platforms.

Online promotion significantly influences both e-WOM and purchase intention, with media selection and content adjustment emerging as critical dimensions. This supports the findings of Auliya (2023), who suggests that targeted online campaigns using appropriate channels can create more engagement and improve conversion rates. Effective online promotion ensures that the messaging aligns with consumer preferences, increasing the likelihood of positive online reviews and purchase intentions.

The mediating role of e-WOM is central to this study. e-WOM enhances the impact of price perception, brand image, celebrity endorsement, and online promotion on purchase intention, suggesting that consumers rely heavily on peer recommendations before making purchase decisions. This aligns with the principles of social exchange theory, which posits that consumers value information exchanged in online communities, influencing their buying behavior (Ahmad et al., 2023).

The positive mediating effect of e-WOM reflects the growing importance of user-generated content in shaping purchasing decisions. As Damayanti et al. (2023) argue, consumers today are more likely to trust peer recommendations over traditional advertising, further highlighting the need for companies to actively engage with their audiences on digital platforms.

This study's findings provide several practical implications for marketers. First, Skintific and similar skincare brands should focus on building strong brand loyalty and carefully selecting celebrity endorsers to generate authentic and appealing content that encourages e-WOM. Second, while price perception alone may not guarantee purchase intention, it remains essential in shaping initial consumer discussions online. Therefore, combining competitive pricing strategies with personalized online promotions can help boost both e-WOM and purchase intention. Finally, businesses must invest in managing e-WOM effectively by monitoring customer feedback and leveraging it to reinforce brand image and trust.

Based on the empirical testing results of the Integrative Model of Digital Marketing Elements, several novelties have been obtained as follows:

1. Integrative Model of Digital Marketing Elements: This model can serve as a solution to address issues related to increasing consumer purchase intention for Skintific facial serums, considering that the results indicate a strong influence on purchase intention at 90%.
2. New Synthesis or Concept Development: A new synthesis or concept has been developed from various existing theories regarding the variables studied, as follows:
    a. Price Perception: This synthesis refers to consumers' subjective and emotional assessment of whether the price of a product or service is considered low or high.
    b. Brand Image: This synthesis involves the perceptions and representations formed in consumers' minds regarding a brand, encompassing evaluations of the extrinsic characteristics of the product or service and how the brand meets psychological or social needs.
    c. Celebrity Endorser: Individuals or groups of celebrities used by companies as communication channels to promote products or services.
    d. Online Promotion: Marketing and communication activities conducted through online media, including social media, to introduce, offer, and market products or services without the need for face-to-face interaction.
    e. Purchase Intention: A psychological condition in which consumers exhibit a desire and tendency to buy a particular product or service.

f. Electronic Word of Mouth (e-WOM): A form of marketing that utilizes the internet as a medium to create and disseminate word-of-mouth information regarding products or services.

3. Use of Structural Equation Modeling (SEM): The use of SEM in structural model analysis provides novelty as it allows researchers to explore causal relationships between variables more comprehensively. This approach offers deeper insights into the complex relationships among variables within a business context.
4. Contribution to Literature: This research enriches the literature by incorporating e-WOM as a mediator in the research model. This inclusion allows for a more in-depth analysis of how e-WOM influences the relationships between independent variables (price perception, brand image, celebrity endorsement, and online promotion) and the dependent variable (purchase intention). By integrating the e-WOM variable, this study provides a more comprehensive view of the factors affecting consumer purchase intention in the digital age. It examines not only the direct effects of the independent variables but also their indirect effects through e-WOM.
5. Emphasis on Purchase Intention as an Endogenous Variable: In this study, purchase intention is treated as an endogenous variable influenced by other variables, including e-WOM, price perception, brand image, celebrity endorsement, and online promotion. This approach presents a new framework that highlights the importance of influencing consumer behavior to enhance purchase intention.
6. Policy Implications Related to Price Perception, Brand Image, Celebrity Endorsement, and Online Promotion: This research provides novelty by linking empirical findings with policy implications that can assist companies in enhancing purchase intention through e-WOM. By emphasizing the significance of price perception, brand image, celebrity endorsement, and online promotion, this study offers practical guidance for companies in making strategic decisions.

6.Conclusions

This study concludes that digital marketing elements, such as price perception, brand image, celebrity endorsers, and online promotion, significantly influence e-WOM and purchase intention for Skintific facial serums in Depok. The key findings indicate that while price perception positively impacts e-WOM, it does not significantly affect purchase intention directly. On the other hand, brand image, celebrity endorsers, and online promotion positively and significantly affect both e-WOM and purchase intention. Additionally, e-WOM plays a crucial mediating role in strengthening the impact of these marketing elements on purchase intention. The managerial implications highlight the need for strategies that enhance perceived behavioral control, deliver relevant promotions, and create high-quality content to boost e-WOM and conversion rates. Companies are advised to focus on improving weaker dimensions, such as price accuracy, endorser expertise, and responsiveness to negative comments, to further enhance consumer interest and drive sales.

For future research, scholars could explore how emerging trends like influencer marketing, social commerce, and artificial intelligence in personalized promotions impact purchase intention and e-WOM across various product categories. Additionally, cross-cultural studies could provide deeper insights into consumer behavior by comparing results from different regions or demographics. Future studies may also benefit from longitudinal designs to capture changes in consumer behavior over time, as well as exploring other mediating variables that may influence the relationship between digital marketing elements and purchase intention.

References:

Ahmad, R., Nawaz, M. R., Ishaq, M. I., Khan, M. M., & Ashraf, H. A. (2023). Social exchange theory: Systematic review and future directions. *Frontiers in Psychology, 13*(January), 1–13. https://doi.org/10.3389/fpsyg.2022.1015921

Amanda, S. N., Ayuni, & Sudrajat, A. (2023). Pengaruh harga dan celebrity endorser terhadap keputusan pembelian produk skincare Skintific. *Jurnal Ilmiah Wahana Pendidikan, 9*(12), 505–514.

Amelia, S. R. (2023). Pengaruh brand ambassador, brand image, dan country of origin terhadap minat beli konsumen. *Journal of Creative Student Research (JCSR), 1*(1), 143–162.

Andini, P. N., & Lestari, M. T. (2021). Pengaruh brand ambassador dan brand image terhadap minat beli pengguna aplikasi Tokopedia. *Prodi S1 Hubungan Masyarakat, Fakultas Komunikasi dan Bisnis, Universitas Telkom, 8*(2), 2074–2082.

Artha, Y., Surbakti, E. Y., & Tambunan, S. R. (2021). Pengaruh celebrity endorser terhadap keputusan pembelian pada toko online Shopee. *Prosiding Konferensi Nasional Social & Engineering Polmed (KONSEP) 2021, 2*(1), 657–664.

Assalam, N. H., & Wibisono, A. (2020). Dampak celebrity endorser terhadap minat beli produk Caffino melalui ekuitas merek sebagai variabel intervening (Studi pada konsumen Swalayan Santri Lenteng). *Journal MISSY (Management and Business Strategy), 1*(1), 26–44.

Auliya, A. (2023). Pengaruh fitur GrabFood, harga, dan promosi terhadap minat beli konsumen pada pengguna aplikasi Grab di Kota Medan. *Jurnal MAKBIS (Mahkota Bisnis), 2*(1), 1–15.

Blackwell, R. D., Miniard, P. W., & Engel, J. F. (2006). *Consumer behavior* (10th ed.). Thomson/South-Western.

Chaerunnisa, T. U. A., Aliyudin, Y., Yulianto, A., & Riono, S. B. (2023). Analisis pengaruh harga produk, citra merek, kualitas produk, dan promosi terhadap minat beli produk sabun Lifebuoy di minimarket Sari Mulya Kaligangsa. *JECMER: Journal of Economic, Management and Entrepreneurship Research, 1*(4), 29–42.

Damayanti, R., Husen, Z., & Mesar, Z. S. H. S. (2021). Pengaruh celebrity endorser terhadap minat beli dengan electronic word of mouth sebagai variabel intervening pada produk skincare Emina. *Jurnal Mitra Manajemen, 5*(6), 390–398. https://doi.org/10.52160/ejmm.v5i6.505

Ekasari, S. (2024). Product marketing strategy for maximizing sales. *Journal of Production, Operations Management and Economics, 4*(3), 30–36.

Fakhri, N. (2017). Konsep dasar dan implikasi teori perbandingan sosial. *Jurnal Psikologi Talenta, 3*(1), 1–10. http://www.ncbi.nlm.nih.gov/pubmed/24501237

Hasan. (2014). Motivasi, sikap dan minat beli konsumen pengaruhnya terhadap keputusan pembelian sepeda motor Yamaha PT. Hasjrat Abadi Sentral Yamaha Manado. *Jurnal EMBA, 2*(4), 35–45.

Hennig-Thurau, T., Gwinner, K. P., Walsh, G., & Gremler, D. D. (2004). Electronic word-of-mouth via consumer-opinion platforms: What motivates consumers to articulate themselves on the Internet? *Journal of Interactive Marketing, 18*(1), 38–52. https://doi.org/10.1002/dir.10073

Julia, S. (2023). Pengaruh iklan TikTok, kualitas produk dan harga terhadap minat beli produk Scarlett Whitening. *Jurnal Informatika Ekonomi Bisnis, 5*(1), 63–68.

Kotler, P., & Keller, K. L. (2016). *Marketing management* (15th ed.). Pearson Education.

Li, S., Suhari, U., Shidiqqi, M. F., Aras, M., & Mani, L. (2023). The role of celebrity endorsement on impulse buying behavior with customer loyalty as a moderating variable in the e-commerce industry. *Business Economic, Communication, and Social Sciences Journal (BECOSS), 5*(1), 59–72. https://doi.org/10.21512/becossjournal.v5i1.9076

Setiawan, L. (2022). Pengaruh celebrity endorsement terhadap purchase intention dengan brand awareness sebagai variabel mediasi pada produk Green Tea Esprecielo Allure. *Jurnal Manajemen Pemasaran, 12*(1), 1–7. https://doi.org/10.9744/pemasaran.12.1.53

Sipakoly. (2023). Pengaruh merek (brand) dan endorser terhadap keputusan pembelian sepeda. *Journal of Social Science Research, 3*, 704–714.